Smoothbore Ordnance Journal
www.napoleon-series.org

Issue 3(10)
Saxon Siege and Defensive Artillery 1810 – 1814

By Dr Martin Klöffler.
[Translated by Digby Smith]

This paper was presented at the conference to mark the 200th Anniversary of the Saxon Elbe and State Fortress of Torgau, in Torgau / Elbe on 29 October 2010. Manuscript for Saxon Home Studies, *Zeitschrift für Säschsische Geschichte*; *Denkmalpflege, Natur und Umwelt*.

Artillery is famed for being the Queen of the Battlefield; much more is known of Saxon field artillery than about their siege and defensive equivalents in the years between 1807 and 1813, when the newly-born kingdom of Saxony was a member of the Confederation of the Rhine.

The major events of the year of 1813 were certainly decided in the great battles, but the fortresses of the line of the Elbe: Hamburg, Magdeburg, Wittenberg, Torgau, Meissen, Dresden and Königstein secured the strategic crossing points and the depots as well as being rallying points for a defeated army. The fortresses were mainly defended by their artillery and thus this paper examines the role of the Saxon siege and defensive artillery in the siege of Torgau and the peculiarities of the construction of the Saxon barrels and carriages used. In view of the complexity of the theme, this can only be an introductory overview and the author refers those interested in further research to the sources listed below.

Illustration 1: Rampart guns on the Johann-George bastion in Königstein fortress. The barrels were cast in, or after, about 1730 and weigh three tonnes. They sit on reconstructions of the old type of carriage with the typical Saxon colour scheme of grey-brown for the wood and sulphur yellow for the iron parts. The wedges of the vertical sights are fully withdrawn, so that we see the maximum possible elevation of about 5 degrees. This shows that targets lying especially high or low, could not be engaged. This indicates that there was, in fact, little to fear from this very imposing-looking battery.

.

Pre-History

All Saxon field artillery materiel, apart from those items in the Königstein fortress, were lost in the capitulation of Lilienstein in 1756; thus the field artillery was re-built on the 4-, 8-, 12-pdr calibre system under Hoyer after the Seven Years War. In this, the Saxons followed the French example instead of the 3-, 6-, 12-pdr system, common in the rest of the Holy Roman Empire.

The defensive and siege artillery, on the other hand, remained mainly on the old system [25], the remnants of which may now be seen in the Königstein fortress, in the Johann Georg bastion and in the arsenal.

The Saxon artillery of the pre-1806 period enjoyed a high reputation among their contemporaries, including the Prussian general and army reformer, von Scharnhorst, who himself was a trained artilleryman: '*The Saxon artillery enjoyed the highest respect of all experts.*' [26]

The Reorganization of 1810.

The main themes of this reorganization were the simplification and standardization of field artillery equipment, which took into consideration the lessons of the campaigns of 1806 and 1809. Those in the Artillery Commission included, among others, *Major Gustav Gottfried von Hoyer* (who later transferred into Prussian service) and *Premier Lieutenant Friedrich Gustav Rouvroy* (Master Gunner and later Director of the School of Artillery and known for his text book.)

According to the specification of *Major Raabe*, from 1810, the Saxon fortress artillery was to be based on the 6-, 12-, 18-pdr scheme, with new barrels and carriages; this was only partially completed by 1813. There was no specific garrison artillery; the men were detached from the 3,000-strong field artillery corps as needed.

The Materiel

Genuine Saxon carriages and barrels may be found among the carriages, howitzers and mortars; only those of the siege and defensive artillery will be examined here.

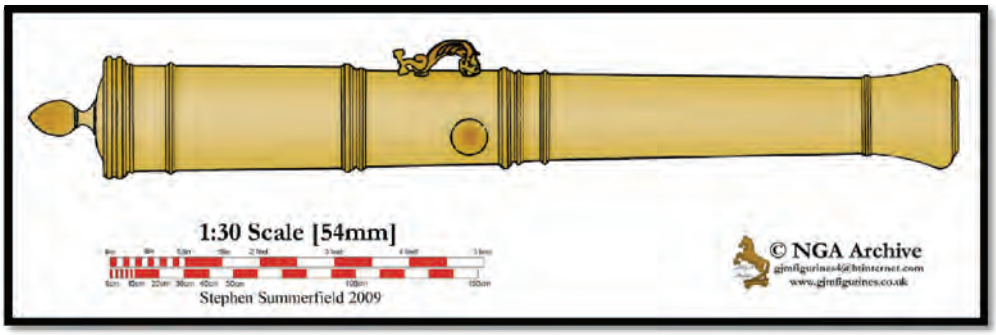

Illustration 2: Old style 18th century *halbe Kartaune* (24-pdr).
[After Rouvroy (1823) II, Plate IV, Fig 44 from Summerfield (2009) *Saxon Artillery 1733-1827,* Partizan Press]

Siege carriages Siege guns are usually in the 12- to 24-pdr category of cannon. Siege carriages are similar to those used by field guns, but much more heavily built and with heavier fittings. In order to increase the range, accuracy and hitting-power, the barrels are cast up to 22 calibres long. Saxon siege carriages are of the old type; with oak and many heavy fittings and the new, made of pine, with fewer iron fittings. The barrels were of the 18- and 24-pdr calibres, with a length of 22 calibres (see Illustration 2). The new carriages also bore the 6- and 12-pdr iron barrels. These pieces were transported on sling carts.

---

[25] Rouvroy, Vol I, pp 190 etc
[26] Scharnhorst, *Handbuch für Offiziere*, Teil 2, Artillerie

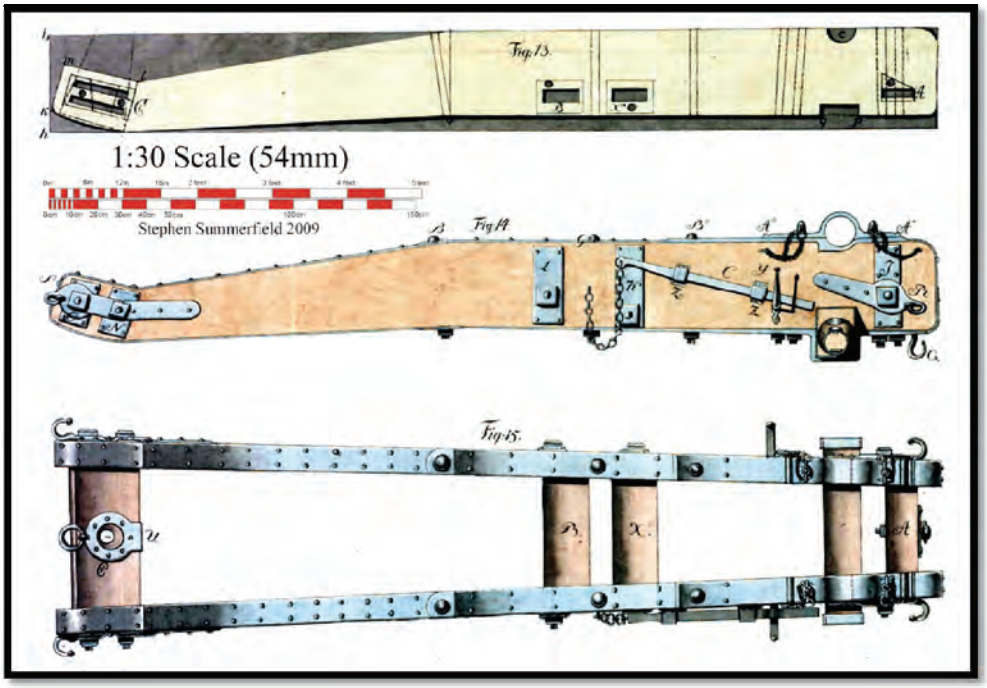

Illustration 3: Saxon old type siege and rampart carriages.
[After Rouvroy (1809) from Summerfield (2009) *Saxon Artillery 1733-1827,* Partizan Press]

The siege guns were placed in the batteries (see below) but could just as well be used for defensive purposes in fortresses. In the latter case, the wheels, of 4 - 4½ feet diameter were a disadvantage, as they made aiming to the sides in an embrasure difficult.

Defensive rampart carriages. The common, or simple, rampart carriage differed from the siege carriage only in its proportions and the fitments. In order that these could be used inside fortresses, and were not designed to travel long distances, they had stronger axles and cheeks, shorter side walls and lighter fitments. The wheels were only 3 – 3 ½ feet in diameter, which allowed better lateral use in the embrasures (see Illustration 3).

Vertical adjustment of the barrel was by means of the wedge sight (aka the "*sight with the endless screw*"; see Illustration 4), which had long since been abolished on field guns, due to its awkward operation. The use of wedges was still common, indeed essential for greater angles of depression. It should be noted, that it was difficult to adjust barrels for deeply plunging (downward) and for very high elevations, which were used for ricochet shots. The barrels were the equivalent of a half Kartaun, which had been bored out for 32-pdr shot. [27]

Placing guns on the ramparts necessitated deep embrasures, whose knee-high outer edges could act as funnels for the projectiles of besiegers' demounting batteries. From about 1770, the French attempted to minimize this disadvantage by use of Gribeauval's carriages, which needed only very shallow embrasures (see Illustration 14). The carriages were placed onto frames, which preserved the lateral aiming capability and allowed ease of bringing the piece into the embrasure by use of slightly inclined rails. This also allowed shooting at night, when direction and elevation were pre-determined. In siege warfare it was accuracy that was the prime concern, not the high rate of fire needed in field artillery.

The recoil pushed the gun back into the loading position, where it only had to be held in place. The elevation was then adjusted by the aforementioned wedge mechanism.

[27] Titze p6

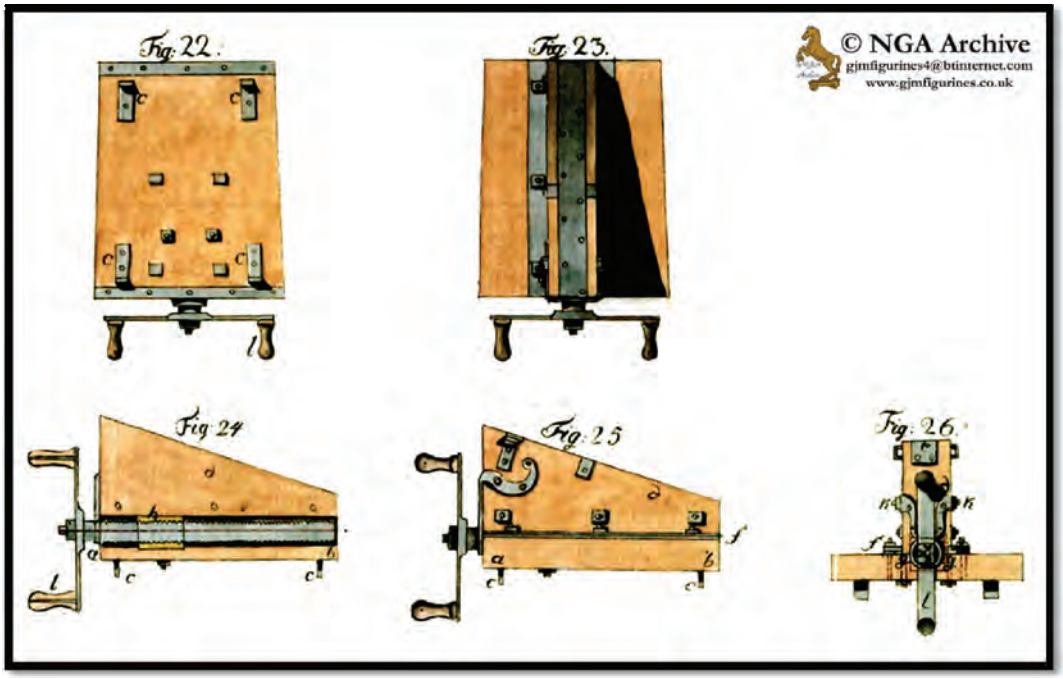

Illustration 4: Saxon wedge gun sight mechanism for rampart and siege guns. By rotating the handles, the screw, which was attached to the underplate, pushed the wedge forwards or backwards, thus raising or lowering the angle of the barrel. [After Rouvroy (1809) – Courtesy of NGA Archive]

It is not certain if the Gribeauval carriage (on the frame, see Illustration 5) or the Montalembert Carriage (casement carriages on frames) were used in Saxon fortresses (see below, in the armament of Torgau fortress). These were mentioned in both editions of Rouvroy, but this does not mean to say that they were actually introduced before 1813. It seems that it was not unusual for these carriages to have been built shortly before a siege, as was the case with the French gunners in Torgau (Augoyat).

If we also consider that the life of such a carriage on the ramparts was only about ten years, it is understandable that such expensive items would have been made under the force of circumstances. In French fortresses, one such Gribeauval carriage would have been placed in the 'salient' (the point) of a bastion.

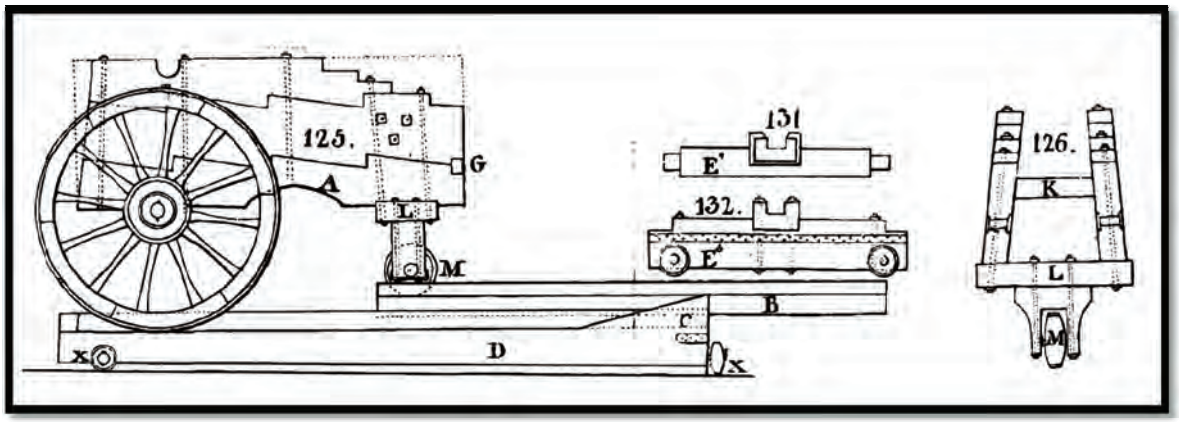

Illustration 5: Gribeauval`s rampart carriage with traversing frame (here without the gradient), so that the recoil is halted by wedge `C` alone. For the installation see the plate (*Affut de la Place*). [Rouvroy (1823) Volume II]

Ship or Rampart carriages were used only in flanking casements, not usually on the ramparts. We do not find any specifically Saxon carriages of this type in Rouvroy, but we must assume that they were used in Dresden and on the Königstein (see Illustration 6).

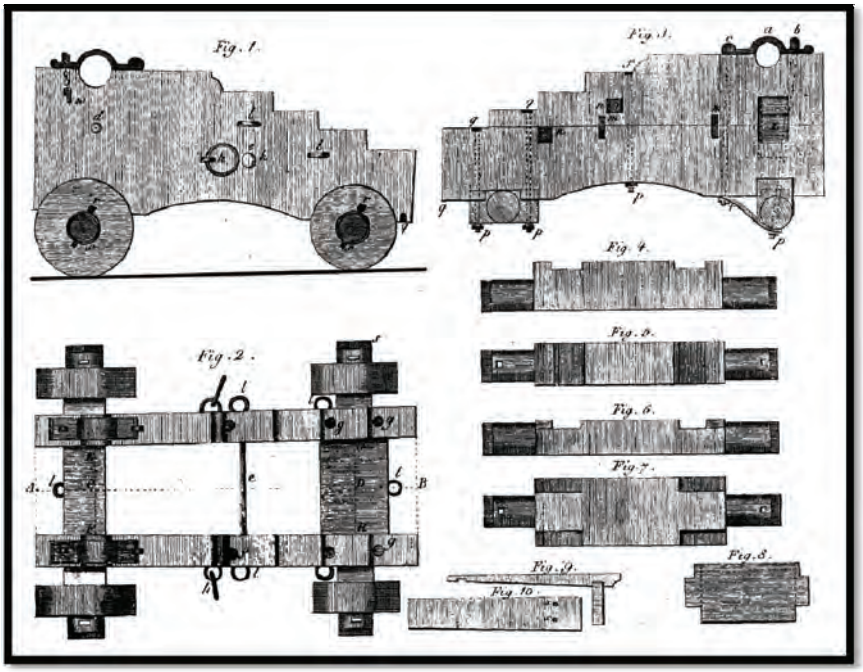

Abbildung 6: Sea-, casemate- or rampart carriage that was probably used only in Dresden or at Königstein. [Scharnhorst (1806) *Handbuch Artillerie* Volume II, Plate 4]

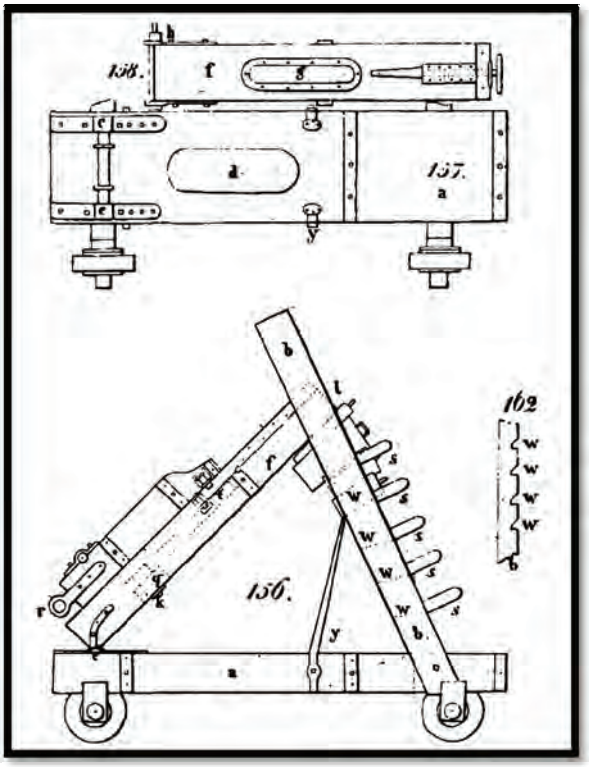

Illustration 7: Saxon depression gun of Koenigstein fortress, after the English example in the fortress of Gibraltar. This gun could cover the areas at the foot of the fortress walls and was also able to engage traffic on the roads and the river in the valley of the Elbe. For loading, the barrel was turned sideways about the pivot 'k.' [Rouvroy (1823) Volume II, Fig. 156]

Mortar beds and barrels: Fixed mortars (mortars with the trunnions at the base of the barrel) were supposed to have been replaced with adjustable mortars (with the trunnions half way along the barrel) with the calibres of 24-, 32-, and 48-pounds (stone), but they only came into use in 1816.

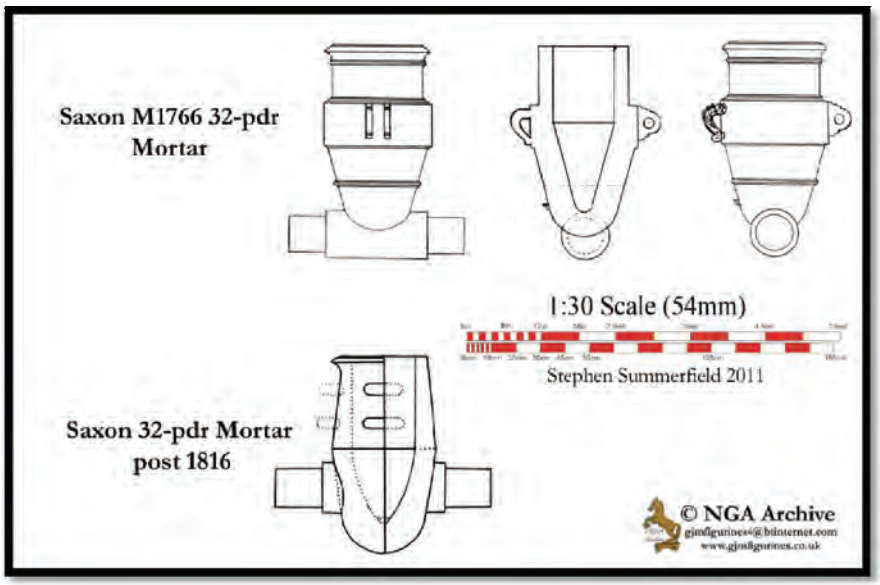

Illustration 8: M1766 32-pdr Mortar and the post-1816 32-pdr Mortar.
[After Rouvroy (1809) – Courtesy of NGA Archive]

The Saxon special feature was the fixed aiming screw, one end of which was fixed to the barrel, in order to prevent the extremely muzzle-heavy item from tipping forward (see Illustration 9). This dictated an awkward loading and aiming process. [28]

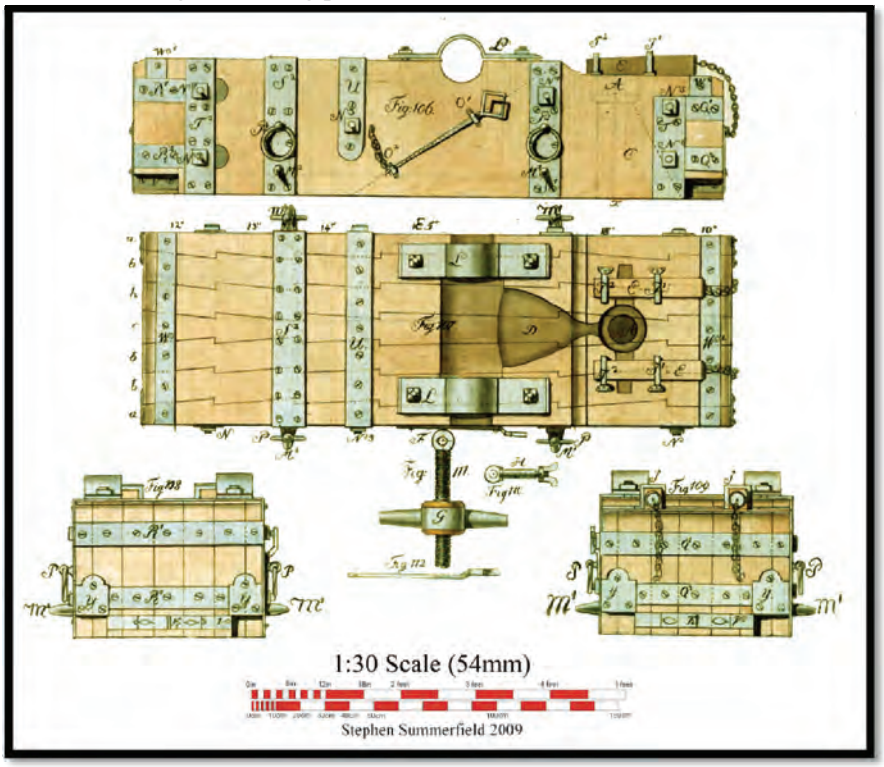

Illustration 9: Saxon old type 32-pdr mortar bed before 1810
[After Rouvroy (1809) from Summerfield (2009) *Saxon Artillery 1733-1827,* Partizan Press]

[28] Titze, Defensionsartillerie, p24

Field guns. As one third of these guns consisted of 8- and 12-pdrs, we call attention to the Saxon 'rolling machine' elevation mechanism (see Illustration 10).

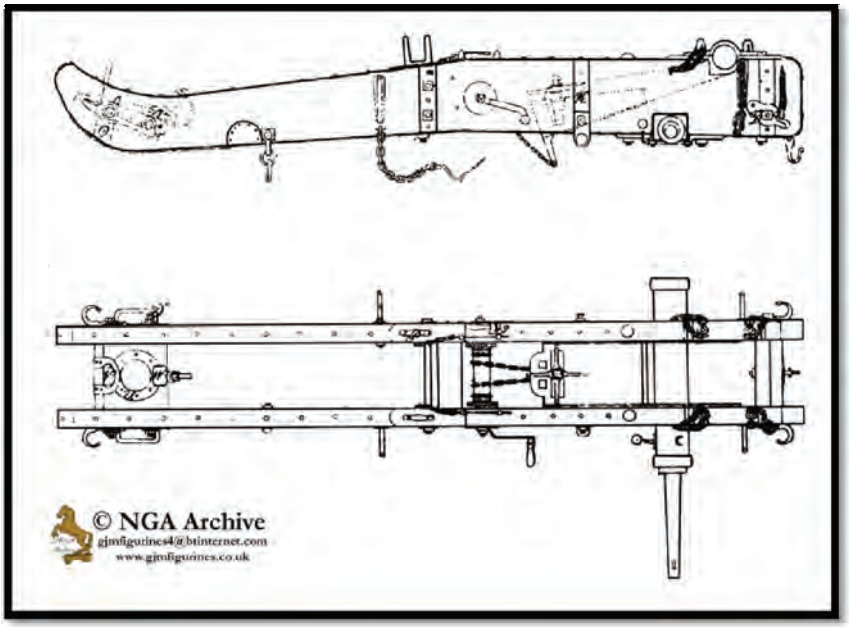

Illustration 10: Barrel elevation mechanism for the 6-pounder, also used on the 12-pdr and the 8-pdr howitzer. Here plan and side elevation. The gun barrel platform is driven by (a chain) around a roller; the (vertical) spindle allows for fine adjustments of the elevation. [Rouvroy (1823) II, Plate II, Figs 14 and 17 - Courtesy of NGA Archive]

The gun barrels of the new specification (Illustration 11) were extremely functional. All decorative elements, such as reinforcement rings and dolphins were abandoned; the cascable was replaced by a handle. The thickness of the barrel`s sides was no longer as much as a calibre; this produced a great saving in the weight of the object. Saxon gun barrels were thus at the lower limit of the projectile-to-barrel ratio, at 1:104.[29] With the old 12-pdr, it had been 1:200.

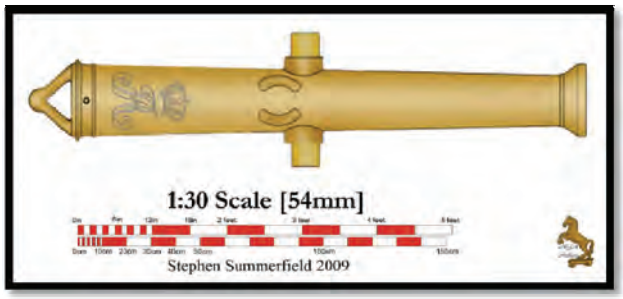

Illustration 11: New [M1810] 12-pdr designed by Raabe. [After Rouvroy (1823) II, Plate IV, Fig 44 and Fig 47 – Courtesy of NGA Archive]

Ballistics, application and effect.

The ballistics of cannon, howitzers and mortars and their effects on fortresses and defensive field earthworks, were passionately discussed in contemporary literature [e.g. Rouvroy (1809 and 1823) and Scharnhorst (1806)]. One notes here a mixture of pre-scientific opinions (e.g. the expansion of gases) and statistical experiments, from which the authors wished to deduce empirical rules for the optimal effects (see Scharnhorst`s experiments). We may sum up the employment and effects of the three contemporary types of ordnance in siege warfare as follows (see also Rouvroy and Scharnhorst).

[29] Aster

Table 25: The employment of guns in the defence of fortresses.

Cannon.	
Maximum effective range:	2,000 paces / 1,500 metres.
Maximum elevation:	-5 to +10 degrees (rampart and siege guns).
Typical calibre:	12-, 18-, 24-pdrs for rampart guns or siege batteries. 4-, 8-pdr for flanking batteries (with other artillery systems, these would be 3-,6-pdrs).
Types of projectiles:	solid iron shot, iron grape shot, shell (aka grenades; only with the 4-pdr Saxon *Granatstück*, a type of unicorn), special projectiles for siege work, such as incendiaries.
Effects	A 24-pdr would penetrate 10 feet (3 m) into an earthen rampart. [30]
Application	1. Direct fire for breaching work. 2. Destruction of the battlements to dislodge the garrison. 3. Ricochet (flanking) fire, along the battlements of a fortress, mainly to dismount any guns on the ramparts. 4. Dismounting guns through the embrasures. 5. Enfilading the moats and the trenches close to the fortress by means of grape. 6. Securing the breaching batteries by means of horse artillery at night. 7. Flanking breaching batteries against sorties

Table 26: The employment of howitzers in the defence of fortresses.

Howitzers.	
Maximum effective range	2,000 paces / 1,500 metres.
Maximum elevation	21 degrees.
Typical calibre	8-, 16- and 24-pdr (stone weight)
Types of projectiles.	Iron shells, iron canister and special projectiles such as carcases
Effects.	A 7-pdr shell will penetrate 2½ feet into the earth and will create a crater 4 feet (1,2m) in diameter. [31]
Application.	1. Engaging targets behind cover, 2. Driving out the garrison, 3. Clearing the battlements with direct fire, 4. Dismounting guns with ricochet fire, 5. Bombardment as with mortars, 6. Nightly ambush work close to the fortress with horse artillery

Table 27: The employment of mortars in the defence of fortresses.

Mortars.	
Maximum effective range	2,000 paces . 1,500 metres.
Maximum elevation	25 – 45 – 60 degrees.
Typical calibre	24-, 32- and 48-pdr (stone weight)
Types of projectiles	Iron shells, Stone balls (in Perrier mortars) and special projectiles such as Trench Bombs [*Trancheekugeln*] [32], etc
Effects	A 50-pdr shell will penetrate to 41 inches / 1 m into the earth; the explosive charge will create a crater 8 feet / 2.5 m in diameter [33] and will generate shock waves.
Application	1. Engaging targets behind cover – as with howitzers. 2. Destroying sluice gates, 3. Evicting the garrison of a redoubt. 4. Piercing the roofs of cellars, magazines, casements and vaults with heavy bombs bombardment in order to demoralize the civilian population and the garrison of a place to force a quick surrender (see Illustration 12). 5. Defence of entrenchments. 6. Coehorn mortars; Perrier mortars

[30] Decker p180
[31] Decker p181
[32] A wooden container holding several hand grenades, designed to disrupt working parties in the trenches)
[33] Decker p181

The quoted ranges and effects are only rough guides and depend upon many factors.

Illustration 12: This is a rare contemporary illustration of a bombardment of Würzburg in 1813. The Gouache shows the flight paths of the bombs (glowing fuses or incendiaries). Similarly one may probably imagine the night bombardments of Torgau.

Artillery in Fortresses

Cannon and howitzers may be used under cover in fortresses in three ways.

1. In casements on special carriages
2. Over the bank i.e. from behind an earthen rampart, without embrasures
3. Through loopholes in the ramparts; the types of carriage used in this case will be discussed in detail.

The tasks of artillery on the ramparts on the front of a bastion (usually 12-, 18- and 24-pdrs) were the command of the front and counter-siege (battering) batteries. In modern parlance, this is long range defence. The smaller guns, the 8-pdrs and wall guns, were placed on the flanks and were used to defend the ditches and to combat storming parties. In modern parlance, this is close range defence.

The weak points in the ramparts were the embrasures, cut deep into them to allow the guns to fire through them. It was hoped to overcome this disadvantage by use of the Gribeauval carriage (see Illustration 13).

Only the lighter guns, the 4- and 8-pdrs, fired over the rampart in the salients of the outworks or in the outlying forts. As the gunners` upper bodies were exposed in this operation, gabions were set up to protect them. The 4-pdr guns were used in the covered way. [34]

Mortars had no fixed installation points; usually a pair of them would fire from the well or the ramparts of a bastion, in order to counteract the assailants` saps and batteries.

In cases of sieges, fortresses were often given batteries of field guns, to act together with the sorties of the garrison as the `offensive option`. They were usually foot batteries, although horse batteries were also sometimes used.

[34] Streuensee Vol II, para 471

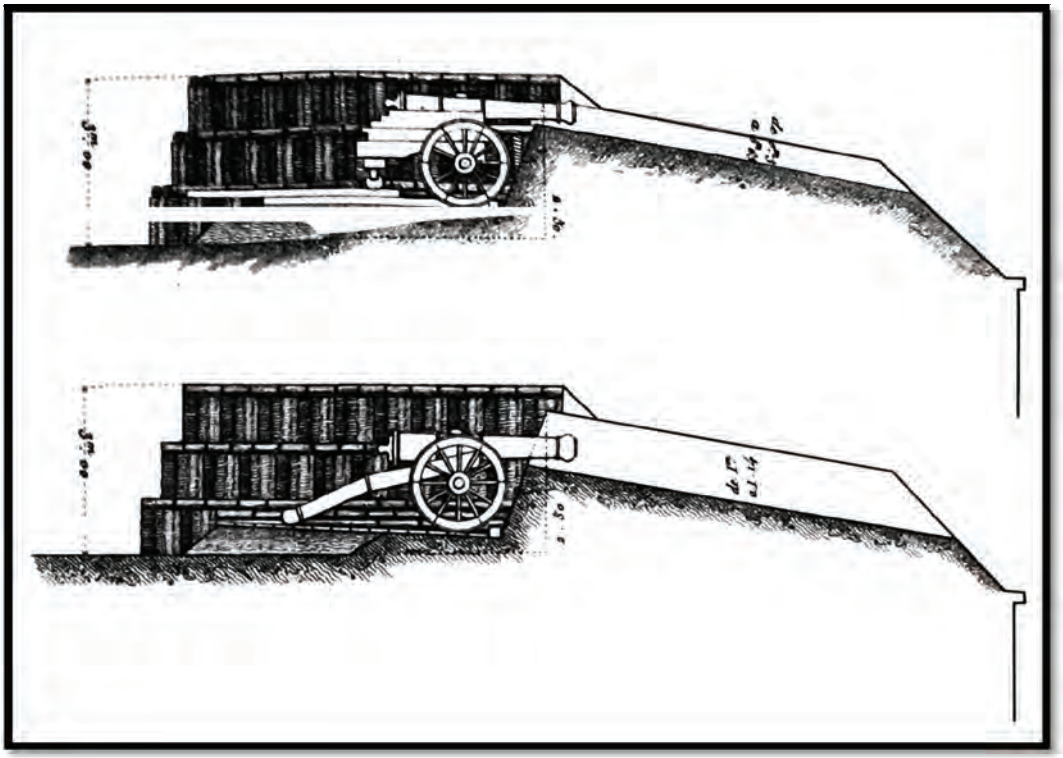

Illustration 13: Comparison of embrasure construction by the French engineer Chasseloup-Laubat ca 1810. At the top, the Gribeauval carriage needs only a shallow embrasure. Below, the conventional rampart carriage, which requires a deep embrasure, in order to bring the muzzle over the edge. A hit in the embrasure is less likely with the Gribeauval carriage and this embrasure is quicker to cut. Both guns are protected against ricochet fire by a traverse.

Construction of Batteries

A formal siege involved the gradual advance of the parallels towards the main walls of a fortress. The aim was to breach a face of the fortress wall with superior artillery forces, in order to force the surrender of the place (Danzig 1807). If no surrender was forthcoming, the breach would be used to storm the place (Wittenberg January 1814). The breach was usually caused by artillery, but mine warfare could also be used (see Illustration 14).

A formal siege was marked by the opening of the trenches (the parallels); it was the `*début de la fin*`, the beginning of the end of a fortress.

Construction of batteries was necessary, if the besiegers' artillery was not to be exposed on the open field to the fire of the fortress` guns. It was practiced in peacetime (see Illustrations 15 – 17). The digging of the trenches was the task of the engineers / pioneers; building the batteries was the job of the artillery.

In some of the standard, German-language sources, Rouvroy differentiates among the batteries according to their function and the ranges at which they were built from the fortress.

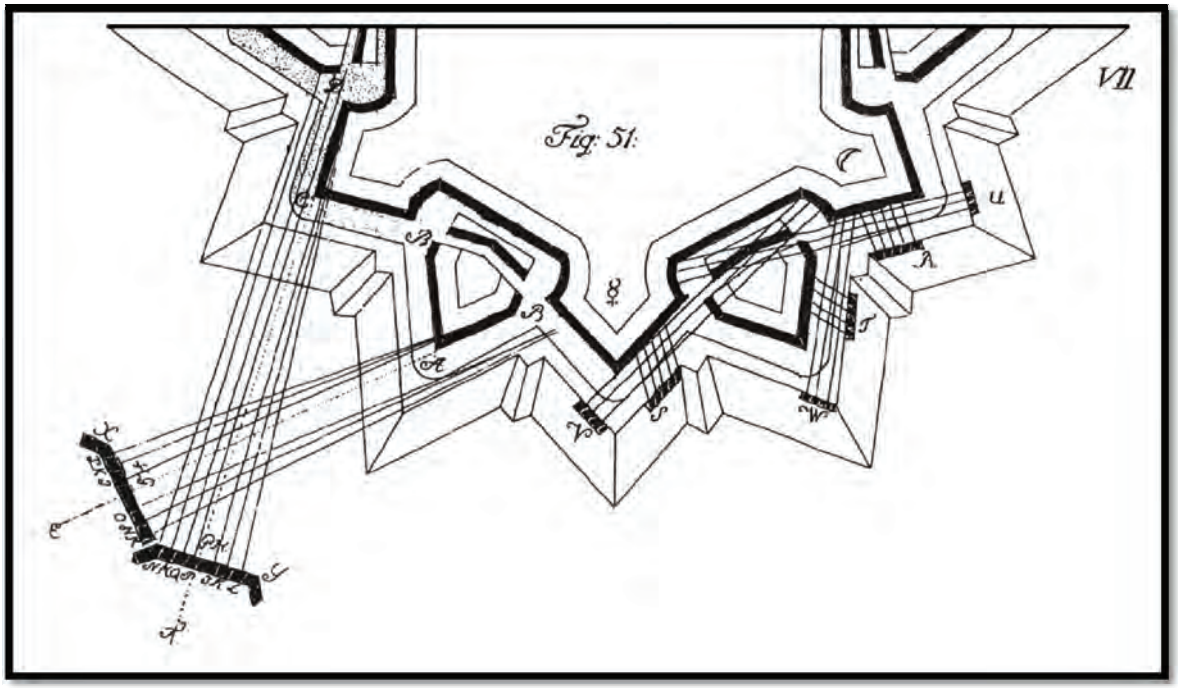

Illustration 14: Cooperation of assault batteries (dismounting-, counter- and breaching batteries) against a bastioned redoubt. Lower left the Royal, or Main battery.
[Rouvroy, (1823) "The Construction of Batteries," Plate VII, Fig. 51]

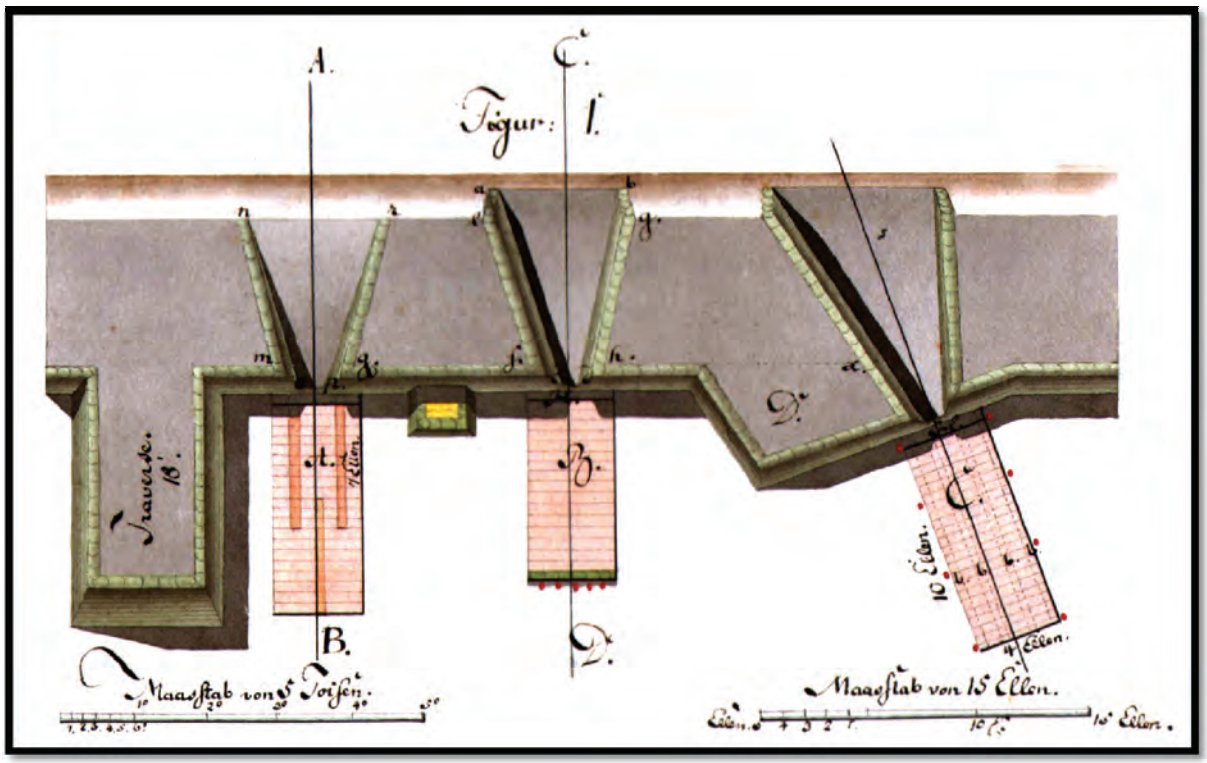

Illustration 15: Plan of a horizontal battery with protective rampart, traverse, ricochet bed (A), bed for horizontal fire (B) and an obliquely cut embrasure (C). Probably the test diagram of Heinrich-Wilhelm von Witzleben, pupil in the Noble Cadet School, Dresden, 1823, who later became an infantry officer.
[Author's Collection]

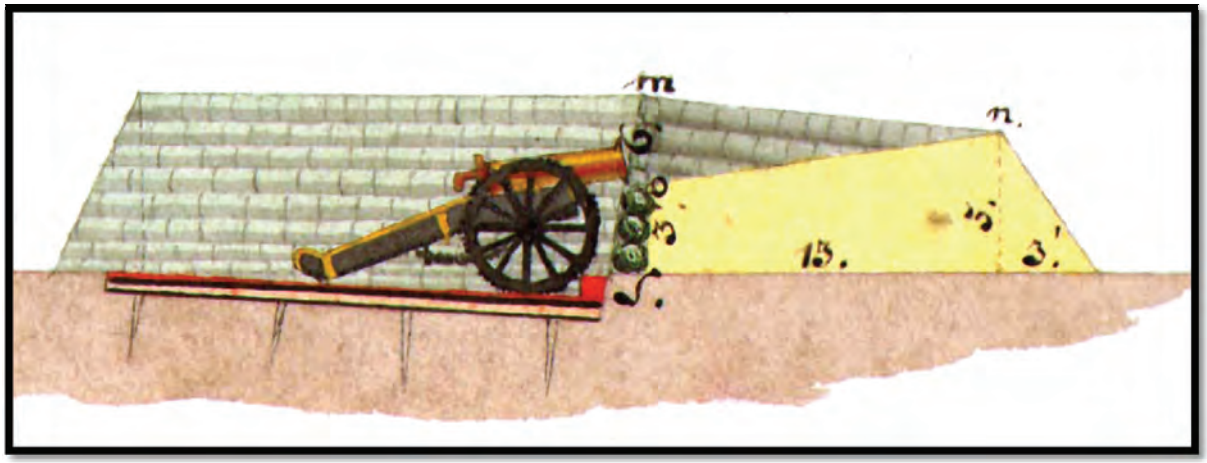

Illustration 16: Cross section through an upwards-inclined ricochet embrasure with an 8-pdr howitzer. The bed is slightly inclined towards the embrasure in order to absorb the recoil and to make running in to the embrasure easier. The transverse logs in front of the wheels prevent damage to the face of the embrasure. For the defender, this type of embrasure was practically undetectable. All measurements in (Saxon) feet. (Witzleben, author).
[Witzleben, Author's Collection]

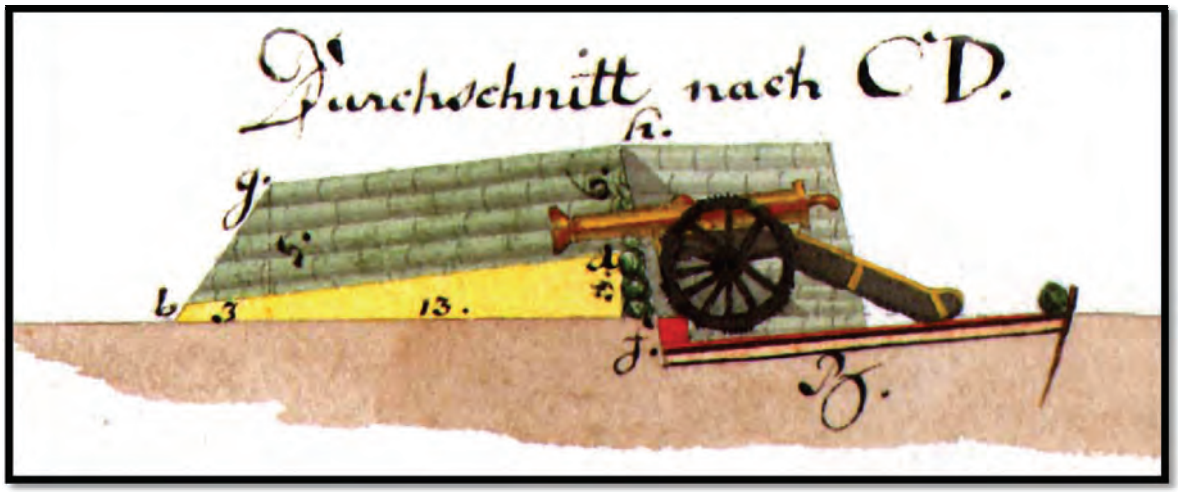

Illustration 17: Cross-section of a horizontal battery with M1810 12-pdr field gun
[Witzleben Author's Collection]

Dismounting batteries –

Ricochet batteries; built at a range of 6 – 800 paces
Embrasure batteries; built at a range of 2 – 400 paces
Breaching batteries: built at a range of 50 – 100 paces
Flanking batteries: to guard against sorties

He also differentiates by the calibre of the guns in each battery.

Cannon
Howitzers
Mortars
Mixed batteries

And according to the method of their construction; they could be flush, sunken or elevated. In principle, all had a protective rampart facing the fortress, behind which, the guns would be placed on firing platforms and magazines for first-line ammunition supplies would be dug.

Embrasure batteries were always open to the rear and extremely vulnerable to sorties, which is why flanking batteries were also built together with them, to repel the sorties. Standing trench guard parties were also needed.

The breaching batteries, used in the last stages of a siege, were also provided with overhead cover against mortar bombs and wall guns. Communication with the rearward (parallel) trenches was by means of the communications trenches (see Illustration 18).

Illustration 18: Siege of Danzig 1807. The assault of two raised dismounting batteries on the outworks of the Bischofsberg in the background. The two French siege batteries are connected by a deep communications trench. On the parapet in the foreground, French officers observe the effects of the fire. Similar batteries would have been built in front of Fort Zinna and the southern front.
[French engraving after 1815]

In real siege operations, one always had to adapt to the local conditions and improvisation, with all the material available, was the watchword.

Sunken batteries were the quickest to build, as they were always extensions of the parallels and the spoil could be used to build the rampart. Their weak point was flooding in swampy ground or in rainy weather. At the sieges of Torgau and Wittenberg for example, the frozen earth had to be hacked out and piled up to form the rampart and the side traverses, which much-reduced its protective value.

Plan of the Armament of Torgau 1813

The state fortress of Torgau had been declared the main national arsenal since November 1811. That is to say, the Saxon army would find a defensible gathering point, with rations in the depots and weapons in the magazines, for use in the field. The army could also move into the camp, defended by the outer ring of forts. According to military doctrine, the defence of the country was based on the possession of a major fortress. The French saw the fortress more as an armed bridgehead in the field, which was to hold the offensive options against Prussia open. [35]

Other Saxon, second rank, fortresses were Wittenberg, Königstein and the partially-demolished fortifications of the residence city of Dresden.

The earthworks of Torgau fortress were mainly built in the summer of 1813 and had not yet been equipped with flanking casements and escarpments to guard against storming attempts; this had to be considered when allocating artillery to the defences. The construction of Torgau fortress was thus semi-permanent, or a semi-field work; the flanking casements and redoubts were only added in the Prussian period. Thus, until 1814, it is unlikely that any casement guns were installed, but they could certainly have been used in the defence of the blockhouses.

Now to the armament of Torgau. The '*Armierungsplan*,' in the `Commissioning Act` of 1812 for Torgau fortress, allocated 186 guns, which corresponds really well to Vauban`s rules.

The 186 guns included
- 29 x 24-pdrs
- 35 x 18-pdrs
- 59 x 12-pdrs
- 33 x long 6-pdrs
- 31 x short 6-pdrs
- 39 x howitzers

Total of 275 artillery pieces.

This means that Vauban`s rule, of 10 guns per bastion were followed [36]
- 10 cannon per bastion
- 5 cannon per detached work
- 16 bastions (main fortress plus bridgehead) and 5 detached outworks:
- 185 guns.

According to the Commissioning Act, the following frames or special frames were also provided:
- 23 x rampart carriages with bedding frames
- 4 x 24-pdr extending frames
- 8 x 18-pdr extending frames.

[35] Niedersen
[36] Streuensee, Part II, para 471

Illustration 19: Prussian plan of the siege of Torgau, with the siege batteries before Fort Zinna (Batteries 1 - 4) and the Teich Redoubt (Batteries 5 - 7). The flanking redoubt and Battery Nr 7 were both at the limit of effective mortar and 24-pounder fire. Bastion Nr 5 of the main rampart could not effectively enfilade the parallel in front of Zinna, as this parallel lay above the crest of the wall and was also covered by a traverse in the flanking redoubt. [After Vogel.]

The author suspects that the usual rampart carriages were merely placed onto the bedding frames. The design of the extending frames can only be guessed at; we are only able to show a French Gribeauval carriage (see Illustration 20).

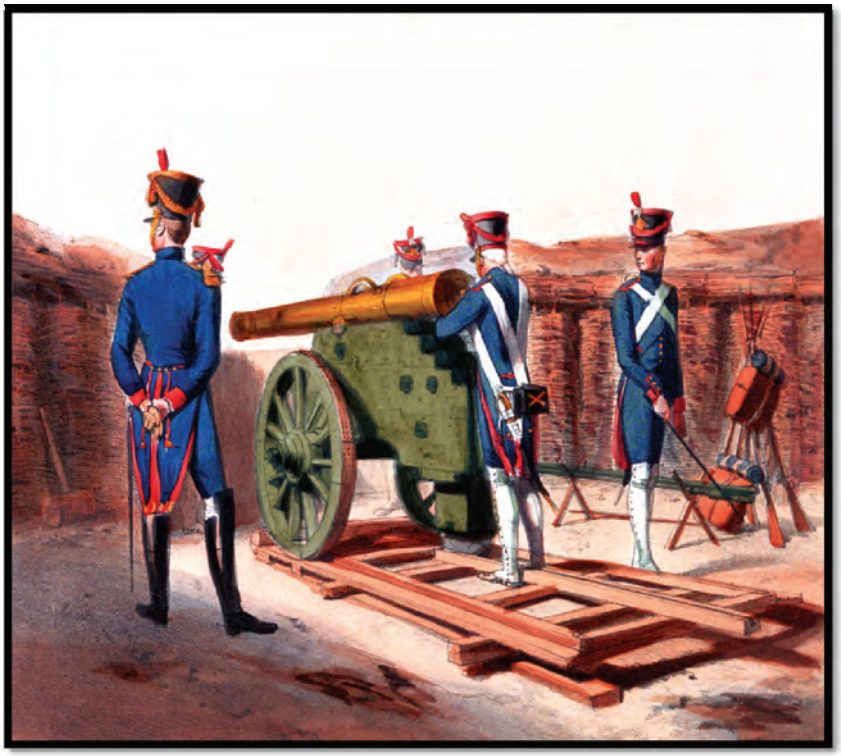

Illustration 20 Adjusting the height of the barrel of a French 12- or 16-pdr on a Gribeauval carriage. The gun-layer sights along the barrel, the gun-firer stands beside him with the lowered match stick at the ready. Note the frame, which is pivoted at the front. The main body of the frame may be moved a few degrees by use of beams. It does not move on rollers as in Illustration 3. The foundations, with the swelling replace the conventional bed. One may imagine that the Saxon frames were of similar construction, with the difference that the small wheel was replaced by the tail of the carriage. [Alfred Marbot – Courtesy of the NGA Archive]

For the *actual* armament of October 1813, *Augoyat* quotes 199 Saxon guns, of which only 8 were 24-pdrs! There were also 150 bronze 8-pdrs, which really belonged to the field artillery and which would have had only feeble effects against the artillery of a formal siege.

The French built 8 x 24-pdr Gribeauval carriages on site for the siege (see the quote in the next section); it is not yet clear how many Saxon rampart carriages were present; we await new discoveries in the archives. There were 2,000 gunners (in Torgau in the siege), which, purely mathematically, gives ten to each piece; *Struensee* calculated 'two gunners to each piece' as being adequate.

Augoyat tells us that all guns were placed on the ramparts, that is to say, that all faces of the defences of the main fortress and the bridgehead were armed, including those not assaulted. This is unusual, as a reserve of gun barrels and carriages was usually kept in the depot. Opposed to this, Vogel mentions a reserve of 40 guns. We can only speculate as to the reasons. Did the defenders wish to be ready for a coup de main, which could not be discounted due to the missing escarpments? In this context, the 150 8-pdrs on the ramparts make good sense.

At the time of the capitulation, 250 guns were surrendered; the extra 51 guns must have come from French or other field artillery batteries. Part of these would have been the sortie battery which had 6x 6-pdr cannon and 4x 24-pdr howitzers. [37]

Logistics of a Siege

A siege demands considerable supplies of materiel from the defenders and thus the significance of the fortress as a depot is emphasized, which held considerable stocks of supplies, which were not available for use in the field. [38]

Augoyat states that the artillery in Torgau:

> *In an artillery workshop, had six forges, in which were made 26 fortress carriages, eight gun frames for various calibers, gun platforms and other fittings for several batteries… Rockets, cartridges and charges were made up in the laboratory:*
>
> > *1,000 each for the 8 x 24-pdrs*
> > *500 each for the 30 howitzers and 6 mortars*
> > *700 each for the 8-pdr guns*
> > *the fortress had 100,000 kg of gunpowder… According to Vauban`s tables, 136,000 kg (136 tonnes) were actually needed.*

These quantities of ammunition were calculated to last for a siege of two months.

The besiegers` main artillery depot was set up at Siptiz, in order to supply the siege batteries attacking Fort Zinna [39]. They were far outside the range of the guns in the fortress and far enough away so that any sortie of the garrison could have been promptly headed off.

When the parallels were opened, an advanced depot was set up behind Zinna village. The Saxon 12-pdr artillery park was located at Dahlenberg, in the area of Dommitsch.

The Siege, November – December 1813

With the fall of Fort Zinna, on the dominant heights of the vineyards, the fate of the main fortress would quickly be sealed, at least that was the opinion of the gunners, as the garrison of the fort were too alert to be surprised by a *coup de main*.

Vogel's plate of twenty Prussian artillery officers, shows that the besiegers, weak in artillery, concentrated a formal assault only on Fort Zinna. Other mortar batteries at the big pond and on the right bank of the Elbe, shown by Augoyat as `fire batteries`, were designed to unsettle the defenders. The bridgehead was not formally assaulted, because, if the French withdrew into the main fortress, they would have destroyed the bridge over the Elbe by fire and a major crossing point would have been lost to the allies.

It has been proven that Saxon mortars were used by the besiegers before Fort Zinna and at the Teichschanze (Teich / Pond Redoubt). According to Vogel, the inside of the Fort Zinna had been 'utterly destroyed.' There was no bomb-proof accommodation for the garrison, weakened by disease, who however, were always able to evacuate the fort undetected. The fate of the fortress was now decided; a new siege battery was at once built in the gorge of the fort, which threatened the main front of the fortress, with the outstanding Bastion Nr 5.

---

[37] Augoyat (p197)
[38] Streuensee II, para 471
[39] Vogel, p32 etc

The 48-pdr mortars at the Teich Redoubt caused several fires in the town, but did not damage the southern front of the fortress, which was attributed to poor accuracy of fire, at maximum range and the use of poor gunpowder.

There was also a battery of Saxon 12-pdrs at Fort Zinna, which "*shot extremely accurately*" [40]. This implies, that with finer windage tolerances in their barrels, they scored more hits than the Prussian guns.

It is thus the irony of history, that both the Saxon-Prussian besiegers and the French defenders used Saxon artillery materiel. Vogel contains many finely detailed anecdotes of the siege. His final observation is from the perspective of an artillery officer:

> *"This siege provides little evidence of the use of art or science… The simultaneous construction of the batteries and the parallels; the protection of the parallels by use of guns with their teams… This operation must have been a primary school in practical siege work for the Prussian army, which they had not practiced for twenty years; it was doubtless important."* [41]

The last word is also Vogel's:

> *"Finally, this fortress, only just created, capitulated, without it being able to be said, that it was either attacked or defended skilfully."*

References

Contemporary

Aster (1816), *Carl-Heinrich: Die Lehre vom Festungskriege, Niederer Theil – Die Leistungen der Ober-Officiere und Untergeordneten,* 2nd Edition, Dresden

Augoyat (1841) "Relation de la défense de Torgau par les troupes françaises en 1815: sous les généraux de division comte de Narbonne et comte du Taillis," In: *Übersetzung in: Archiv für die Artillerie- und Ingenieur-offiziere,* Part 6 Volume 12, Berlin, p186 ff

Decker (1828), *Carl von: Der preußische Taschen-Artillerist,* Berlin

Hoyer, J. G. v. (1804) *Allgemeines Wörterbuch der Artillerie, welches die Erklärung aller verschiedenen Kunstwörter, Begriffe und Lehrsätze der Geschützkunst in theoretischer und praktischer Hinsicht, nebst der Geschichte der wichtigsten Erfindungen in derselben, enthält. T. 1.* A-E. Tübingen: Cotta

Rouvroy Friedrich Gustav (1809), *Handbuch des Batteriebaus oder die Anlegung und Erbauung der Batterien beim Angriff auf feste Plätze,* Leipzig.

Rouvroy, Friedrich Gustav (1809) *Vorlesungen über die Artillerie zum Gebrauch der Königl.-Sächs. Artillerie-Akademie,* Dresden.

Rouvroy, Friedrich Gustav (1823) *Vorlesungen über die Artillerie zum Gebrauch der Königl.-Sächs. Artillerie-Akademie*, Dresden.

Scharnhorst, G. v. (1815) *Handbuch für Officiere in den angewandten Theilen der Kriegeswissenschaften,* Hannover, Erster Theil von der Artillerie

Scharnhorst, G. v. (1804-14) *Handbuch der Artillerie. 3 Bde. Mit 37 gefalt. Kupfertafeln. Hannover, Helwing,* Volume II, p515

Struensee, Karl August (1786) *Anfangsgründe der Kriegsbaukunst: Von der Beschaffenheit der eigentlichen Festungen,* Volume 1-2.

Struensee, Karl August (1769) *Anfangsgründe der Artillerie, zweythe Auflage,* Leipzig und Liegnitz.

Vogel, J.L. (1844) *Die Belagerung von Torgau und Wittenberg 1813/1814,* Berlin.

[40] Vogel (1844)
[41] Vogel (1844) p57